DICTAMAT 50 WS-MFL

Technical Manual

You can find the current version of our manual on our website under «Downloads»:
https://en.dictator.de/products/door-closing-solutions/door-closers/sliding-door-closer-dictamat50/ws/

© DICTATOR Technik GmbH • Gutenbergstr. 9 • 86356 Neusäß • Germany
Tel. +49(0)821-24673-0 • Fax +49(0)821-24673-90 • E-mail info@dictator.de • 201906

A) Safety Instructions / Components Included

1) Safety Instructions

When installing and using the DICTAMAT 50 WS-MFL with tensioned wire rope, hold-open and freewheel function make sure to observe all information and advice given in this manual. During the installation we recommend to wear protective gloves to prevent any risk of getting hurt by sheet edges.

The casing of the spring rope pulley may never be opened as the released spring can cause major injuries. If the spring should for some reason no longer work properly, the complete device has to be replaced!

It has also to be made sure that the spring rope pulley and the radial damper are protected in order to prevent fingers being trapped (protection cover!).

The closing speed has to be adjusted on the radial damper so that the door can easily be stopped by hand in every position, making sure nobody will be endangered.

2) Components Included (Ill. 1)

Spring rope pulley (25 or 50 N) with bracket and 2 m of plastic rope
Radial damper LD 50 WS with attachment for WS 6 wire rope
Mounting bracket = freewheel carrier for radial damper LD 50 WS with counter plate AP GD 50, buffer and quick chain link for fixing the rope
Bracket with wire rope tensioner
Electromagnet EM GD 50 Q 23
Bracket with clamp piece for WS 6 wire rope and supporting rope tensioner
5 m of WS 6 wire rope and 5 m of steel rope Ø 3 mm

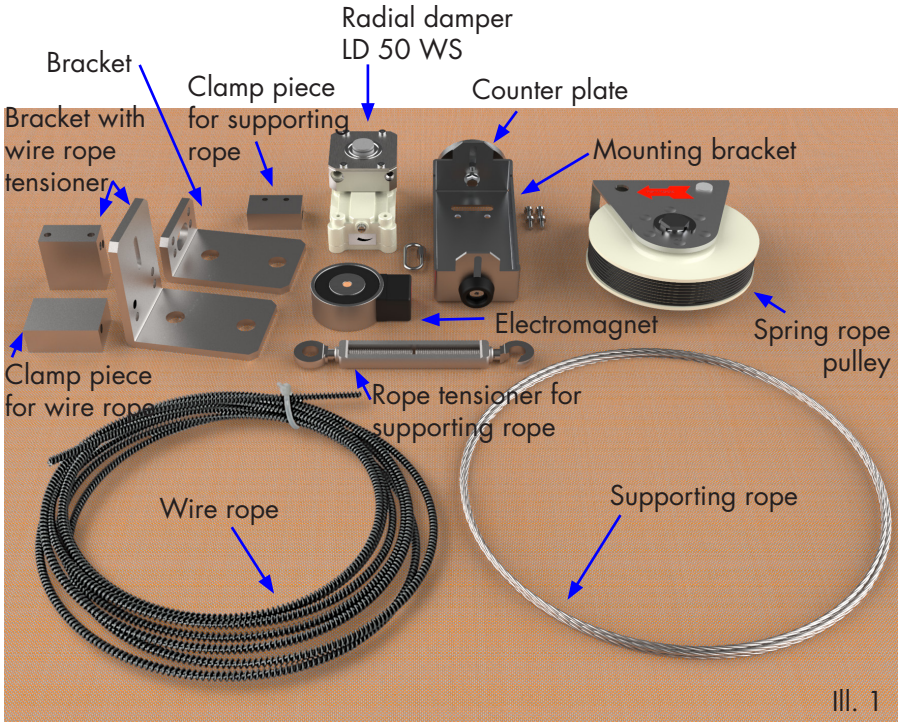

Ill. 1

© DICTATOR Technik GmbH • Gutenbergstr. 9 • 86356 Neusäß • Germany
Tel. +49(0)821-24673-0 • Fax +49(0)821-24673-90 • E-mail info@dictator.de • 201906

B) Dimensions

The following dimensioned drawings show the most important dimensions. In case you need further dimensions, we would be happy to provide a AutoCAD drawing - or you contact our technical customer service.

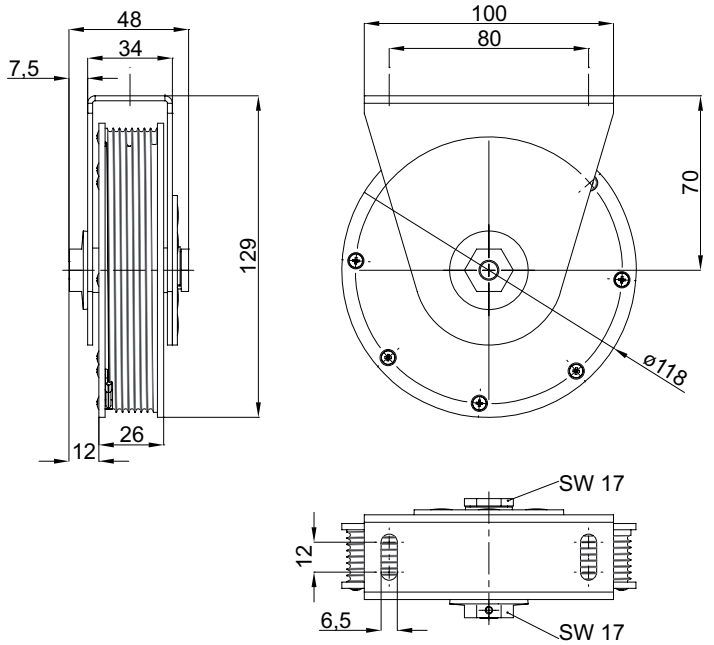

Spring rope pulley

Ill. 2

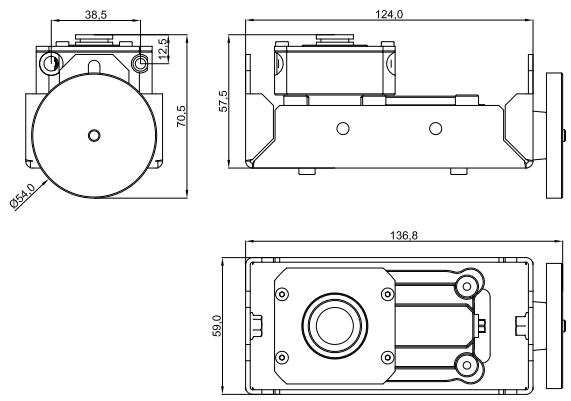

Radial damper LD 50 WS for wire rope with mounting bracket and counter plate

Ill. 3

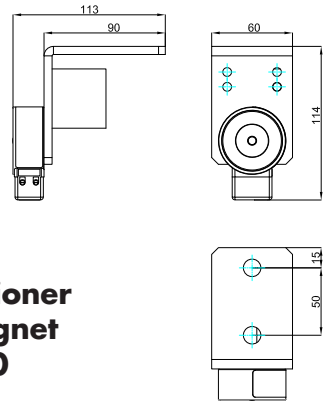

Bracket with wire rope tensioner and electromagnet EM GD 50 Q 30

Ill. 4

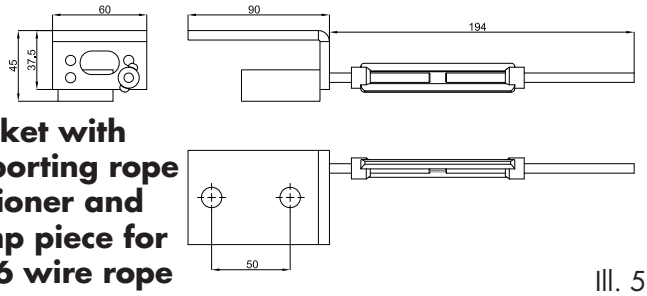

Bracket with supporting rope tensioner and clamp piece for WS 6 wire rope

Ill. 5

C) Installation of the DICTAMAT 50 WS-MFL

1) Determining the Mounting Positions

The spring rope pulley of the DICTAMAT 50 WS-MFL is mounted in the CLOSED position of the sliding door.

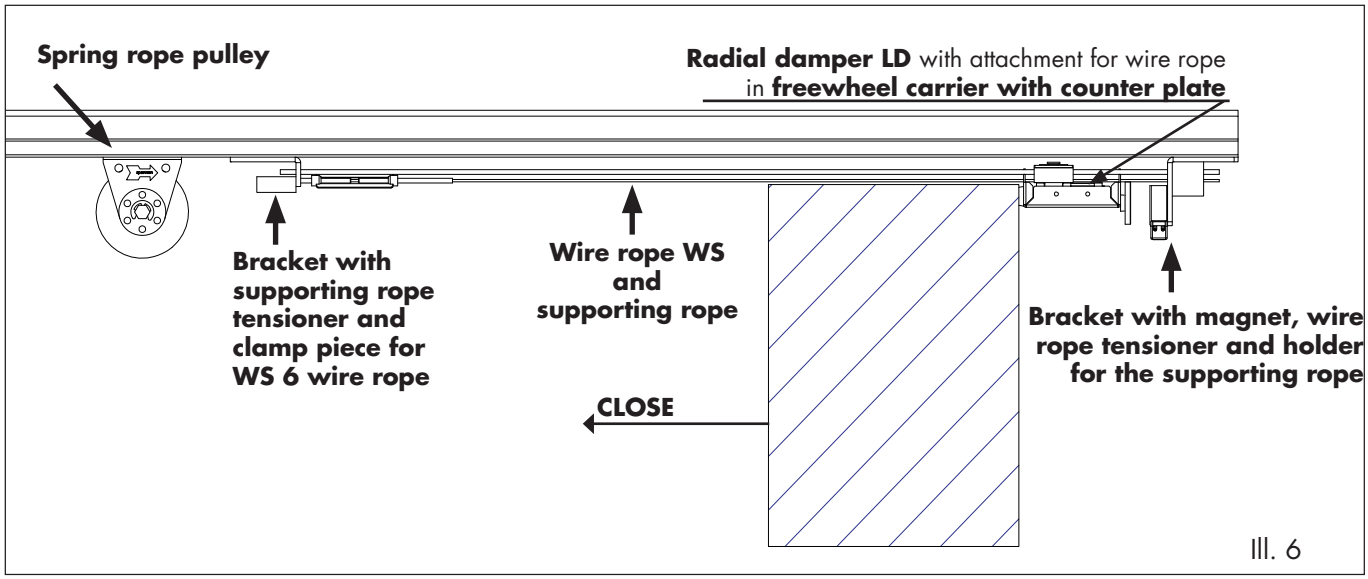

Ill. 6

Only the wire rope and the supporting rope hold the radial damper LD 50 WS with freewheel carrier. It is not fixed to the door!

IMPORTANT: The wire rope and the supporting rope have to position the freewheel carrier in such a way that with one side it can push with the buffer the door leaf and on the other side, when the door is open, the **complete surface of the magnet adheres to the counter plate** (see ill. 7).

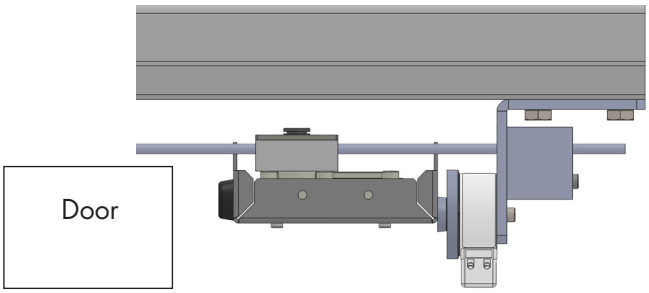

Ill. 7

The attachment on the radial damper for guiding the wire rope can be turned according to the required damping direction (see point C/2d).

IMPORTANT: The bracket with the tensioning device for the supporting rope and the clamp piece for the wire rope as well as the bracket with the wire rope tensioner and the holder for the supporting rope have to be mounted so that the wire rope and the supporting rope run exactly in a straight line (see ill. 8).

Ill. 8

© DICTATOR Technik GmbH • Gutenbergstr. 9 • 86356 Neusäß • Germany
Tel. +49(0)821-24673-0 • Fax +49(0)821-24673-90 • E-mail info@dictator.de • 201906

C) Installation of the DICTAMAT 50 WS-MFL - cont.

2) Installing the Radial Damper

2a) Fixing the counter plate on the freewheel carrier

First you fix the counter plate according to the following illustration by means of the included hexagon screw on the side of the mounting bracket. Please make sure that the rubber piece sits between counter plate and carrier.

This side has then to point in the direction of door OPEN.

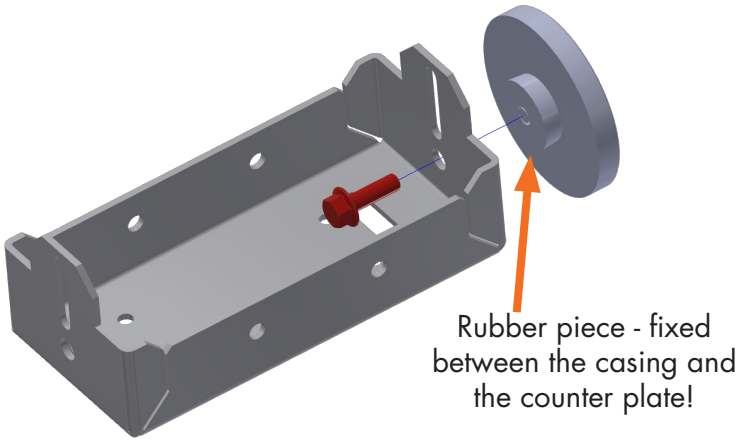

Ill. 9

2b) Fixing the rubber buffer and the quick chain link to the freewheel carrier

On the opposite side of the freewheel carrier is fixed the also included rubber buffer. This buffer "meets" the door when the pushing freewheel carrier closes the door.

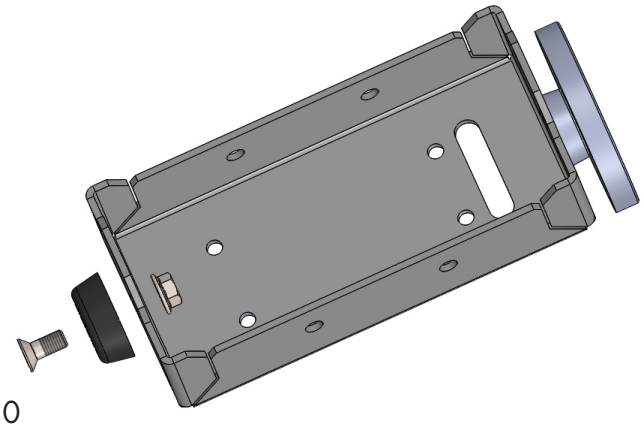

Ill. 10

C) Installation of the DICTAMAT 50 WS-MFL - cont.

2c) Fixing the radial damper in the freewheel carrier

Now you use the four included plastic screws (Torx T20) to fix the radial damper in the freewheel carrier.
Max. tightening torque of the screws: 2 Nm

ATTENTION: The adjusting screw has to be on the same side as the oblong hole in the carrier bottom.

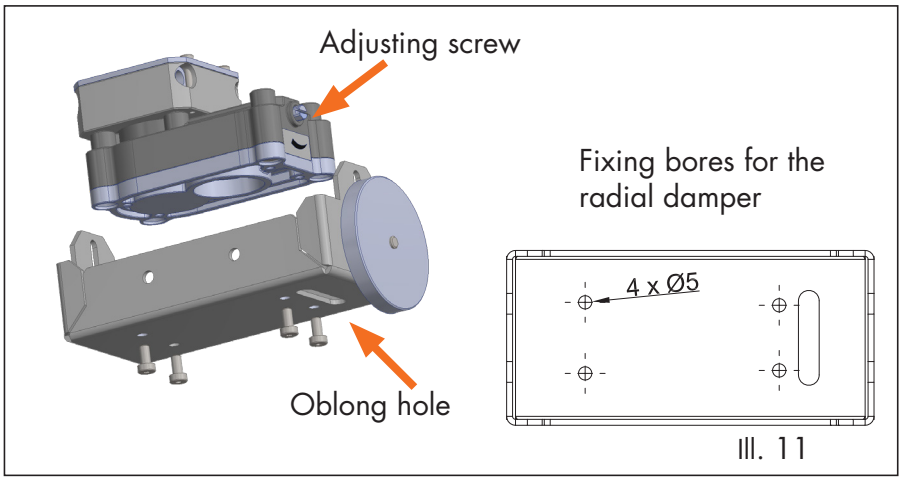

Ill. 11

2d) Correct positioning of the attachment for the wire rope

In the factory the attachment for the wire rope is fixed in such a way on the radial damper LD 50 that the wire rope can be guided as shown in ill. 12 and the damping will be effective anticlockwise.

However, on rare occasions it may be necessary to dismount the attachment for changing the damping direction and then to fix it again.

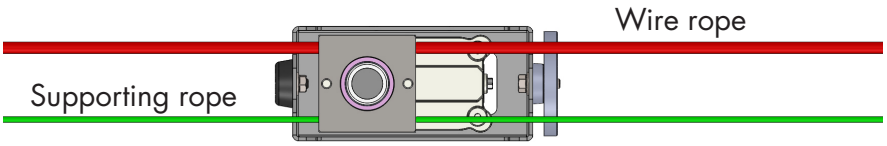

Ill. 12

© DICTATOR Technik GmbH • Gutenbergstr. 9 • 86356 Neusäß • Germany
Tel. +49(0)821-24673-0 • Fax +49(0)821-24673-90 • E-mail info@dictator.de • 201906

C) Installation of the DICTAMAT 50 WS-MFL - cont.

Ill. 13

(1) Changing the damping direction

Step 1: Unscrew the four fixing screws of the cover and take off the cover (see ill. 14).

Step 2: Take out the wire rope wheel and turn it (For taking it out, if necessary, turn the radial damper upside down and softly hit something solid. Then the wire rope wheel will fall out!):

Wire rope wheel with the writing pointing upwards (see ill. 13): damping anticlockwise,

with the writing pointing downwards: damping clockwise

Then put back the cover and fix it again with the screws.

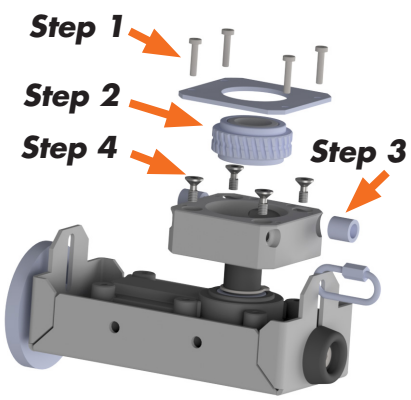

Ill. 14

(2) Positioning the attachment for a different guiding of the rope

Step 1: See "Changing the damping direction"

Step 2: See "Changing the damping direction"

Step 3: Remove the guide bushes (if necessary use a small screw driver to push the bushes out). Below these are the fixing screws of the wire rope attachment.

Step 4: Loosen the four screws of the wire rope attachment and pull it off the axle of the radial damper.

Step 5: Turn the attachment so that the bores for the plastic bushes show in the direction of the rope and then put it back on the axle of the radial damper. Then again tighten the wire rope attachment and insert the guide bushes.

Step 6: Check whether after having turned the attachment, the damping direction is correct. If not, correct it (see above step 2).

Step 7: Then again tighten the cover.

C) Installation of the DICTAMAT 50 WS-MFL - cont.

3) Installation of the Wire Rope and the Supporting Rope

3a) Fixing the electromagnet to the bracket

First you fix the electromagnet EM GD 50 Q 23 with the included cylinder head screw on the bracket - see adjoining illustration.

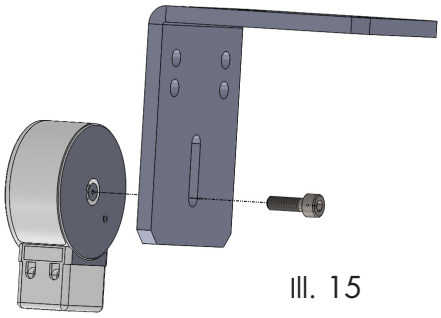

Ill. 15

3b) Mounting the bracket for the wire rope tensioner

The bracket for the wire rope tensioner and the electromagnet is mounted at the end of the rail where the door is open. If necessary, use a counter plate or larger washers for this purpose.

IMPORTANT:
The bore in the bracket for guiding through the rope (optional bores are marked in ill. 16 by arrows) and the one in the wire rope attachment on the radial damper have to be exactly aligned, so that the wire rope runs absolutely straight - see also ill. 8. The other bore is needed for the supporting rope. Also this one has to be perfectly aligned!

Furthermore it has to be made sure that, when the door is open, the counter plate on the bracket completely adheres to the whole surface of the electromagnet.

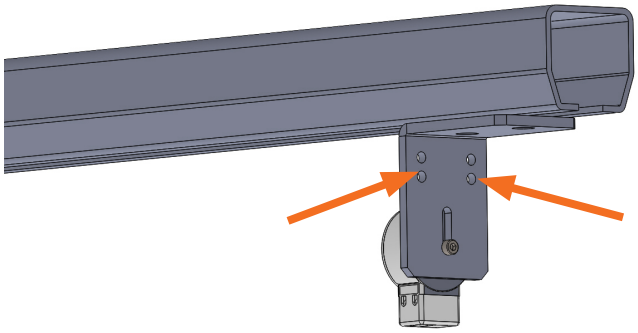

Ill. 16

3c) Mounting the bracket with the supporting rope tensioner and the clamp piece for the wire rope

On the other end of the rail is fixed the bracket with the supporting rope tensioner. If necessary, use for this purpose a counter plate or larger washers.

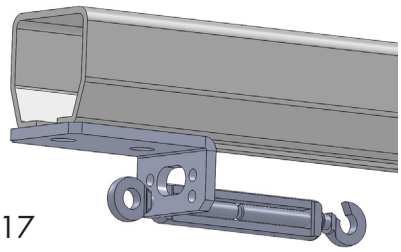

Ill. 17

© DICTATOR Technik GmbH • Gutenbergstr. 9 • 86356 Neusäß • Germany
Tel. +49(0)821-24673-0 • Fax +49(0)821-24673-90 • E-mail info@dictator.de • 201906

C) Installation of the DICTAMAT 50 WS-MFL - cont.

3d) Mounting the wire rope

- Guide the wire rope in the freewheel direction (usually the opening direction of the door) through the corresponding bore with the plastic bush in the wire rope attachment of the damper (see also point C/2d).

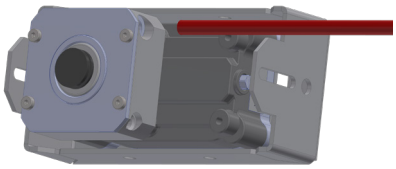

Ill. 18

- Guide the wire rope through the bore in the clamp piece. Then fix it there from below by means of the headless pins (internal hexagon wrench size SW 3) (see ill. 19).

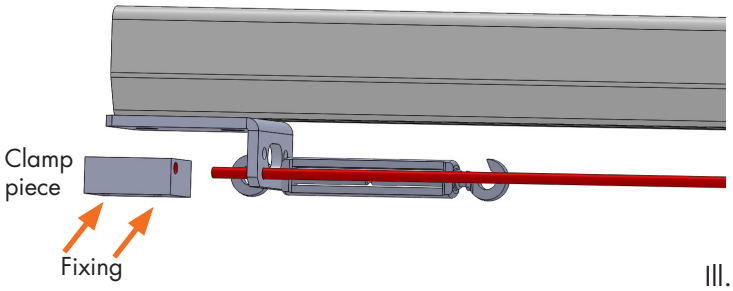

Ill. 19

- Guide the wire rope through one of the bores of the bracket for the wire rope tensioner. You have to choose the bore so that the wire rope will be perfectly aligned. Then insert the wire rope in the bore of the wire rope tensioner. Doing this turn the worm inside the wire rope tensioner.

ATTENTION: The wire rope tensioner is NOT fixed to the bracket, but is held by the tensioned rope once the mounting has been finished.

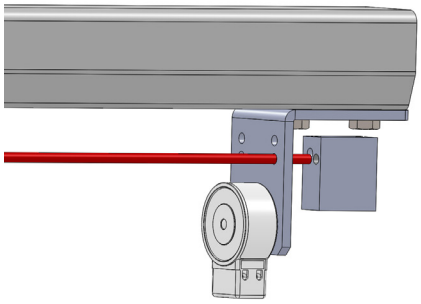

Ill. 20

C) Installation of the DICTAMAT 50 WS-MFL - cont.

3e) Pretensioning the wire rope

Now pretension the wire rope until it doesn't sag any more.

For tensioning use the Allen screw SW 6 on the wire rope tensioner.

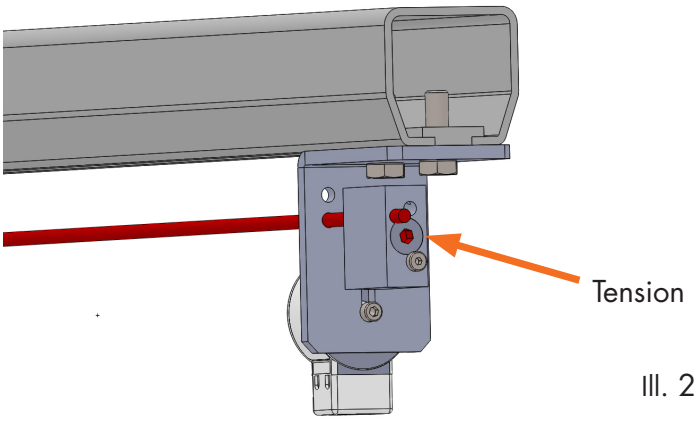

Ill. 21

Turning clockwise: more tension

Turning anticlockwise: less tension

3f) Mounting the supporting rope

The only function of the supporting rope is to stabilise the freewheel carrier so that it always runs in an absolutely horizontal line.

- ***Radial damper***
  Guide the supporting rope (green) through the other still available bore in the wire rope attachment of the radial damper.

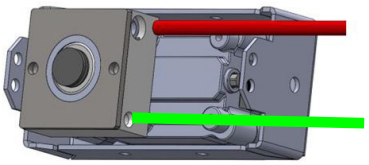

Ill. 22

- ***Bracket with electromagnet***
  (1) Guide the supporting rope (green) through the still free bore of the bracket.
  (2) Guide the supporting rope (green) through the upper bore in the clamp piece.
  (3) Laterally clamp the supporting rope by means of the headless pin M5 (internal hexagon SW 2.5) in the clamp piece.

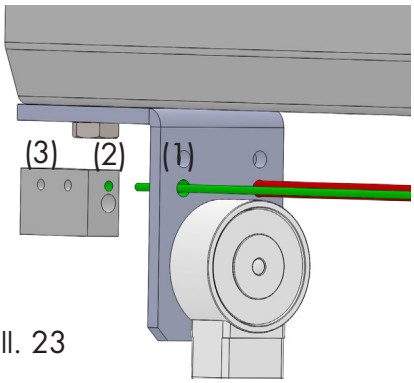

Ill. 23

© DICTATOR Technik GmbH • Gutenbergstr. 9 • 86356 Neusäß • Germany
Tel. +49(0)821-24673-0 • Fax +49(0)821-24673-90 • E-mail info@dictator.de • 201906

C) Installation of the DICTAMAT 50 WS-MFL - cont.

3f) Mounting the supporting rope - cont.

- Hook the thimble of the supporting rope (green) in the hook of the rope tensioner on the bracket on the CLOSED side of the door.

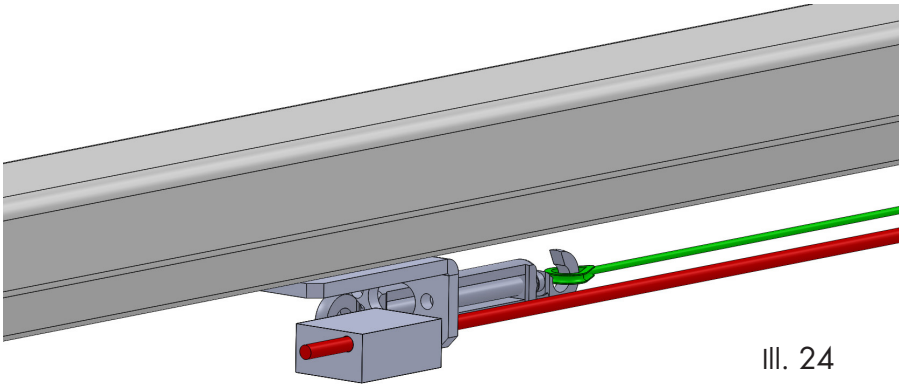

Ill. 24

- Then pretension the rope by turning the rope tensioner anti-clockwise (seen from the rope!) until it doesn't sag any more.

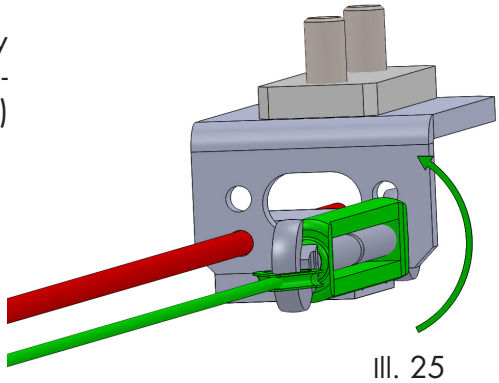

Ill. 25

4) Connection of the Electromagnet

The EM GD 50 Q 23 electromagnet needs a 24 VDC power supply. The connection is realized in the lateral terminal box in the terminals marked "+" and "–".

Ill. 26

Connection terminals for the 24 VDC supply of the electromagnet

C) Installation of the DICTAMAT 50 WS-MFL - cont.

5) Mounting the Spring Rope Pulley

The spring rope pulley of the DICTAMAT 50 WS-MFL is mounted in the CLOSED position of the sliding door.
Usually the eyelet of the Kevlar rope of the spring rope pulley is fixed to the mounting bracket with the radial damper (see point C/5b).

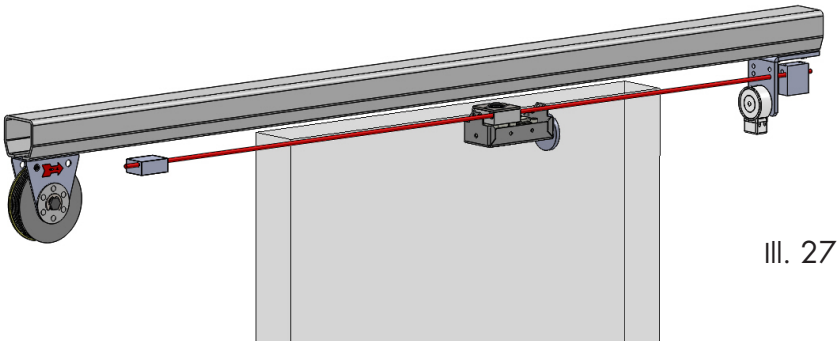

Ill. 27

5a) Fixing the spring rope pulley

The bracket of the spring rope pulley features two oblong holes on its top which allow to screw the spring rope pulley from below to the ceiling/rail. In case the two oblong holes cannot easily be accessed in the choosen mounting position, an additional mounting plate, part no. 070114, is available (see ill. 28, right illustration).

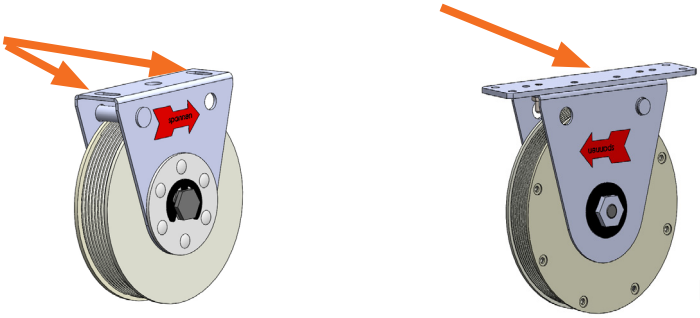

Ill. 28

During installation you have to make sure that the spring rope pulley is fixed so that its rope always points in the direction of the door leaf. You simply turn the spring rope pulley accordingly. As you can tension the spring from both sides, nothing else has to be changed.

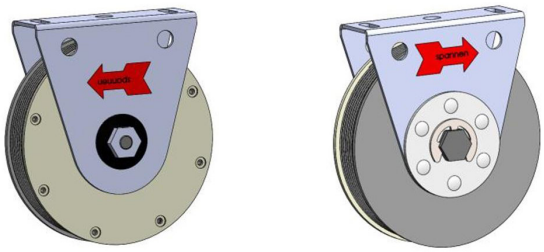

Ill. 29

© DICTATOR Technik GmbH • Gutenbergstr. 9 • 86356 Neusäß • Germany
Tel. +49(0)821-24673-0 • Fax +49(0)821-24673-90 • E-mail info@dictator.de • 201906

C) Installation of the DICTAMAT 50 WS-MFL - cont.

5b) Fixing the Kevlar rope of the spring rope pulley on the door leaf

The Kevlar rope has to run straight from the spring rope pulley, i.e. exactly horizontally and in-line, without any lateral deviation.

IMPORTANT: When choosing the fixing point for the rope of the spring rope pulley, you have to make sure that the travel of the spring rope pulley allows the complete travel of the door!

Usually the pressed on eyelet of the Kevlar rope of the spring rope pulley is fixed by means of the quick chain link (marked red in ill. 30) to the oblong hole in the bracket with the radial damper.

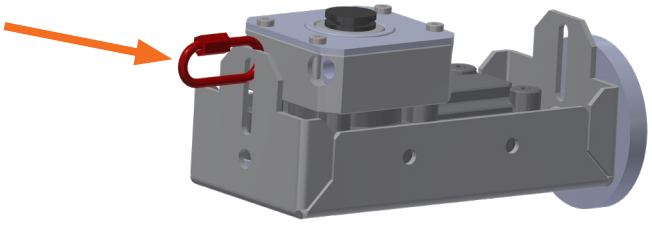

Ill. 30

When fixing the rope you have to make sure the rope runs absolutely straight. If necessary, you can remove the safety pin - but only when the rope has been securely fastened. The safety pin shall prevent the rope from uncoiling when accidentally being released during mounting.

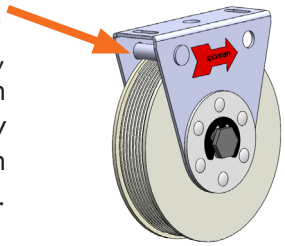

Ill. 31

6) Tensioning the Wire Rope and the Supporting Rope

Before starting the adjusting work, the wire rope as well as the supporting rope are finally tensioned. For the proceeding see points C/3e and 3f).

IMPORTANT:
Don't tension the wire rope too much, as otherwise moving the door will require too much effort. The correct tension is achieved when the rope doesn't rest or touch anywhere.

After having completed the adjusting work according to the following pages, you should operate the door about ten times and then again control the tension of the ropes.

D) Adjusting the Closing Force and Speed

1) Adjusting the Closing Force on the Spring Rope Pulley

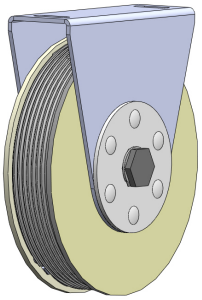

Ill. 32a

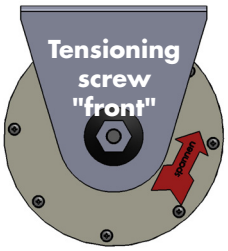

Ill. 32b

Ill. 32c

Open the door **completely** (max. opening 1.5 m). There have to be left at least 1.5 windings of rope on the spring rope pulley.
The spring is pretensioned by the tensioning screw SW 17 being accessible from both sides in the direction of the arrows "spannen" = tension (ill. 32a - 32c). Maximum pretension: 2, 4 respectively 5 revolutions depending on the used spring rope pulley (see table below)!

Releasing: In case the spring had been tensioned too much, the pretension can again be reduced by turning the tensioning screw against the direction of the arrow.

DICTAMAT 50 WS-MFL					
25 N		50 N		80 N	
Travel	Rev.	Travel	Rev.	Travel	Rev.
1800 mm	0.5	1500 mm	0.5	1000 mm	0.5
1650 mm	1	1350 mm	1	850 mm	1
1350 mm	2	1050 mm	2	550 mm	2
1050 mm	3	730 mm	3		
700 mm	4	400 mm	4		
400 mm	5				

The diagram below (ill. 33) indicates the closing force of the spring rope pulley in relation to the pretension and the door width.

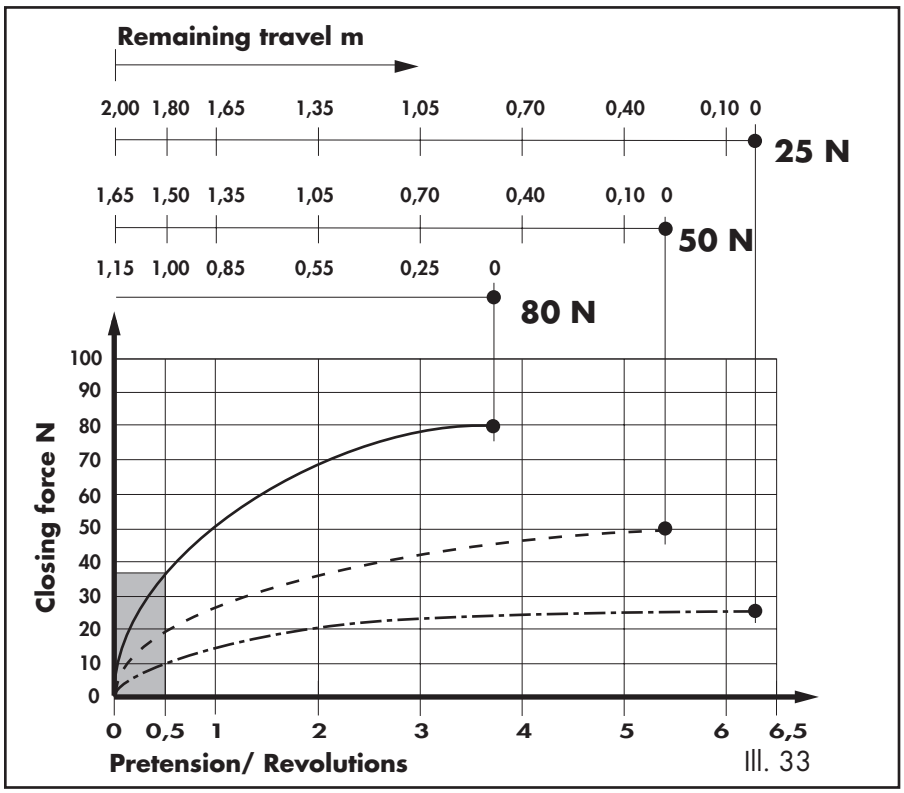

Ill. 33

© DICTATOR Technik GmbH • Gutenbergstr. 9 • 86356 Neusäß • Germany
Tel. +49(0)821-24673-0 • Fax +49(0)821-24673-90 • E-mail info@dictator.de • 201906

D) Adjusting the Closing Force and Speed - cont.

2) Adjusting the Closing Speed

In order to adjust the closing speed **open** the door **completely**.

Now adjust the closing speed during the closing of the door by turning the adjustment screw on the radial damper (Allen key 5.5 mm) (see ill. 34).

Turning clockwise:	reduces the closing speed
Turning anticlockwise:	increases the closing speed

In total 15 revolutions are possible between the minimum and the maximum damping. In the factory the damper is set to a medium damping.

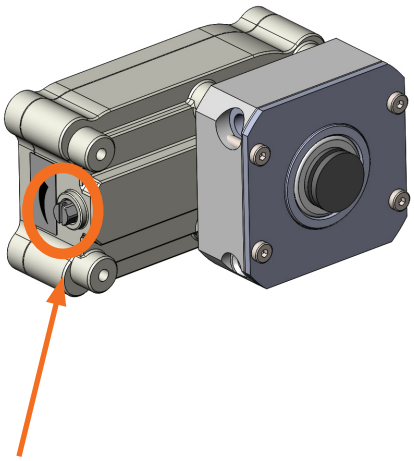

Ill. 34

Adjustment screw for the closing speed

Now check whether the spring closes the door out of any open position, independent from how far the door had been opened. If necessary, increase the tension of the spring or reduce the damping.

IMPORTANT: Tension the spring only when the door is completely open!

E) Maintenance, Servicing

Annually:

1. Check the door for damages and its smooth operation.
2. Check the fittings for damages and wearing: rail, wheel hanger, door handle etc.
3. Check the secure fixing of all door and operator fittings.
4. Wire rope and wire rope wheel have to be replaced at the latest after 100,000 operations.
5. Check the complete wire rope, the toothing of the wire rope wheel, the supporting rope and the rope of the spring rope pulley for damages and wearing.
6. Check the freewheel of the wire rope wheel for smooth operation and running noises.
7. Lubricate just the running surface of the freewheel in the wire rope wheel insert with Vaseline (ill. 35). For this purpose slightly reduce the rope tension, unscrew the cover, take out the wire rope wheel and apply some Vaseline to the shaft.

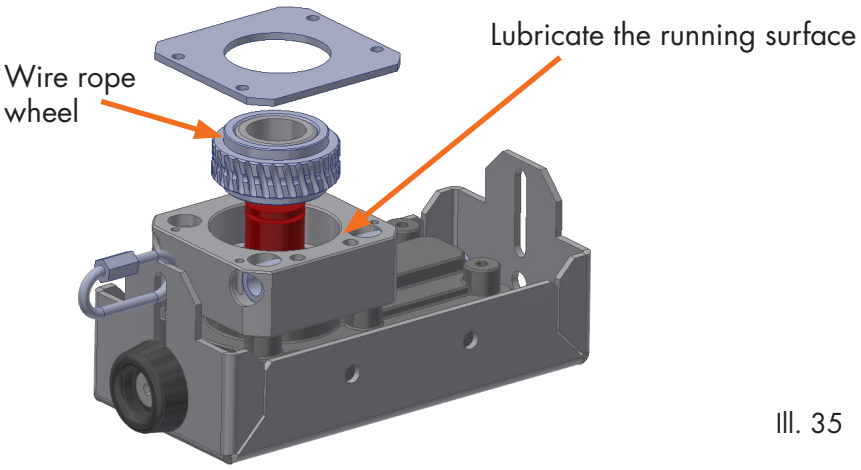

Ill. 35

8. Check the tension of the ropes - see points C/3e, 3f and 6.
9. Check the closing speed and force and, if necessary, adjust it. Too fast doors represent a risk of injuries.
10. All damaged and worn parts have to be replaced as soon as possible by original spare parts.

© DICTATOR Technik GmbH • Gutenbergstr. 9 • 86356 Neusäß • Germany
Tel. +49(0)821-24673-0 • Fax +49(0)821-24673-90 • E-mail info@dictator.de • 201906

F) List of Spare Parts

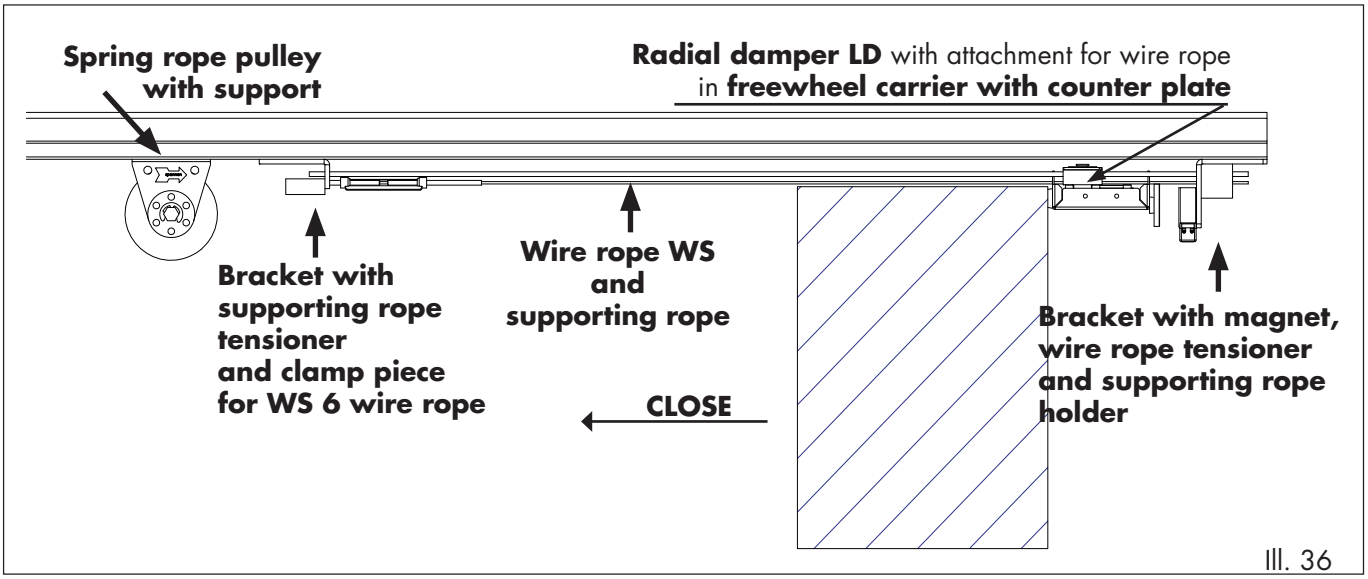

Ill. 36

	Part no.
Radial damper LD 50 WS, without mounting bracket	244080
Mounting bracket for radial damper LD 50 WS	701040
Wire rope WS 6, per meter	244147
Wire rope tensioner, without bracket	701042
Supporting steel rope Ø 3 mm, with clamp piece, 5 m	701046
Supporting rope tensioner	700133
Bracket with wire rope tensioner and electromagnet	701044
Clamp piece wire rope, without bracket	701047
Bracket with supporting rope tensioner and clamp piece for wire rope WS 6	701049
Bracket with counter plate for clamp piece	701050
Spring rope pulley 25 N with sliding hub, bracket zinc-plated	070102
Spring rope pulley 50 N with sliding hub, bracket zinc-plated	070093
Mounting plate for spring rope pulley with sliding hub	070114
Spare rope for spring rope pulley	700058
Electromagnet EM GD 50 Q 23	040020
Counter plate AP GD 50 G, without base plate	040057